PRODUCT SPECIFICATION

NF10104KB

Single Handle Basin Faucet

(Rough-in Dimensions):

(Unit): mm

Pressure range: 0.1-0.5MPa

Best to use: 0.3MPa

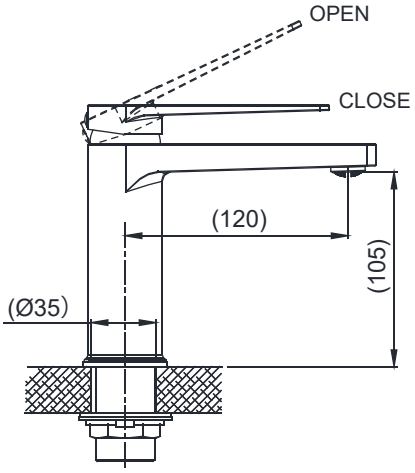

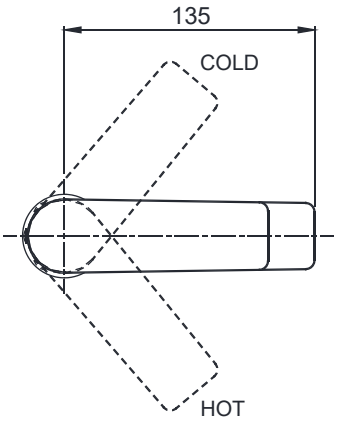

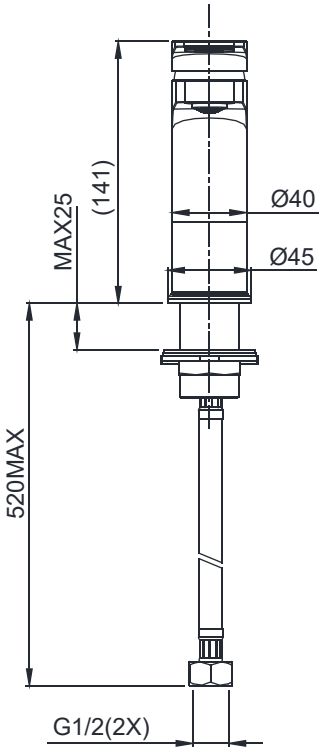

Item No.	NF10104KB
Available Color	Black
Materials	Brass
Cartridge	Φ25ceramic cartridge
Aerator	Neoperl
Shipping Package	Set/CTN: 12 Set M^3/CTN: 0.073 M^3 G.W/CTN: 16 kg

Remarks: With S.S. flexible supply tube set, Without press pop up waste, Table opening size Φ35,0.3MPa±0.02MPa, Outlet water flow 4.4L/min.

INNOCI reserves the right to make changes or modifications on any of its products without advance notice.